Mobil-AID®

Dual Field Ionization Chamber Paddle Kit
AID Part No. 705135
Owner's Manual 69265 Rev. A

For The Philips PRACTIX 400

Table of Contents

1.0 INTRODUCTION	Page 1
2.0 OPERATING INSTRUCTIONS	Page 2
2.1 Paddle Alignment	Page 2
2.2 Routine Care and Maintenance	Page 2
3.0 SPECIFICATIONS	Page 4
3.1 System Performance	Page 4
3.2 Physical Parameters	Page 4
4.0 INSTALLATION INSTRUCTIONS	Page 5
4.1 Equipment Supplied	Page 5
4.2 Equipment Required	Page 5
4.3 Paddle Holder Installation Procedure	Page 5
5.0 CALIBRATION (Not Applicable)	Page 8
6.0 PRINCIPLES OF OPERATION	Page 9
6.1 Diagnostic / Troubleshooting Guide	Page 9
7.0 REPLACEMENTS	Page 11
7.1 Replacement Parts List	Page 11

List of Figures

Figure 2.1	Mobil-AID AEC Paddle	Page 3
Figure 4.1	Paddle Holder Template	Page 6
Figure 4.2	External Mounting	Page 7
Figure 7.1	Dual-Field Paddle and Paddle Holder Assembly	Page 12
Figure 7.2	75032 Paddle Cable	Page 13

1.0 INTRODUCTION

The Mobil-AID dual-field ionization chamber paddle is an important accessory for the field of mobile radiography. It greatly simplifies the use of systems such as the Philips PRACTIX 400 mobile x-ray generators by working with the automatic exposure control (AEC) to compensate for variations in parameters such as:

- Patient anatomy and size
- Source-to-image distance (SID)
- kVp-dependent response of screen-film combinations

The operator is required only to select a reasonable kVp for the anatomy involved and position the circular ionization chamber field or fields of the Mobil-AID paddle behind the film cassette in line with the anatomy of principle interest. The AEC does the rest, automatically determining the exposure time for the precise milliampere-seconds (mAs) required to give excellent diagnostic radiographs. The results are:

- Reduction in number of x-ray retakes, along with their cost and inconvenience.
- Reduction in patient and operator radiation required to produce good films.
- Films that are not only consistently diagnostic, but that are uniformly exposed by all operators on all shifts and on all AEC equipped generators.

There are a number of differences between the Mobil-AID paddle and other "photo-timer" AEC systems used with stationary x-ray systems. The ion chamber under mobile operating conditions cannot be protected from damage as it is in a table or wall installation. Rather it must be securely mounted inside a very sturdy paddle for rough handling in hospital beds, emergency carts, etc. Since this paddle is so sturdy, it obviously cannot be used in front of the film cassette as are the typical entrance-type ion chambers. Therefore in order not to be seen on the films, the paddle is placed behind the film cassette and operates as an exit-type ion chamber.

2.0 OPERATING INSTRUCTIONS

2.1 Paddle Alignment

The paddle has two fields. For normal chest exposures select both fields. Position Field One behind one lung and Field Two behind the other lung. In this o

3.0 SPECIFICATIONS

The following specifications apply to performance with the Philips Practix 400 mobile x-ray generators:

3.1 System Performance

kVp Range / Screen-film Speed

Generally, screen-film combinations from approximately 50 to 600 may be accommodated throughout the range from 50 to 150 kVp. Variations in cassettes make it difficult to be more specific, but even greater range may be possible.

Paddle / Ion Chamber

Ion chamber field size	Nominal 7.6cm (3 inch) diameter by 1cm (0.38 inch) thick
Number of ion chamber fields	2
Reproducibility	$\leq$0.05 coefficient of variation
Mechanical scale	Paddle position scale in centimeters
Paddle size H x W x L cm (inches)	1.3 x 13.5 x .54.5 (0.5 x 5.3 x 21.5)
Paddle weight kg (lbs)	1.0 (2.2)
Cable Length retracted	0.9m (3 feet)
Cable Length extended	4.6m (15 feet)

Power

Power is provided by the Philips Practix 400:

Voltage	Interface Connection	Maximum current
+5VDC	pin 9	
+15VDC	pin 1	0.5A
-15VDC	pin 6	0.5A

3.2 Physical Parameters

Temperature and Humidity

Storage	-55 degrees C to 85 degrees C, 95% RH
Operating	0 degrees C to 50 degrees C, 90% RH, non-condensing

Dimensions, Weight (Nominal)

	Size H x W x L cm (inches)	Weightkg (lbs.)
Paddle	1.3 x 13.5 x 54.5 (0.5 x 5.3 x 21.5)	1.0 (2.2)
Paddle Cable	Retracted: 0.9m (3 feet) Extended: 4.6m (15 feet)	0.3 (0.7)

4.0 INSTALLATION INSTRUCTIONS

4.1 Equipment Supplied

The Mobil-AID paddle kit, 705135, includes all the cables and hardware to interface with the Philips Practix 400 x-ray generator. The following table lists the individual components by their replacement part numbers.

Description	AID Part No.	PMS Part No.
Owner's manual	69265	4512 590 21***
Kit, 705135 installation hardware(includes drill bit and template)	705***	4512 590 21***
Paddle holder assembly	70591	4512 590 21801
Cable, paddle (external)	75032	4512 590 21821
Paddle/dual field ion chamber	77044	4512 590 21831

4.2 Equipment Required

- Assorted screwdrivers (standard and Phillips head).
- Assorted box wrenches or nut drivers, inch sized.
- High speed drill

4.3 Paddle Holder Installation Procedure (refer to Figures 4.1 through 4.7)

1. Position the aluminum paddle holder template against the right hand side panel of the x-ray generator as shown in Figure 4.2.

2. Mark the locations of the three holes with a center punch. Remove the template and remove the right hand side panel from the x-ray generator (refer to Section 4.4.2 and Figure 4.7 for side panel removal). Take care of short internal handswitch cable! Disconnect the x-ray pendant switch cable from microprocessor board (remove P205). Drill the 3 holes with the supplied 0.203" drill bit. Be certain to remove all metal chips and burrs.

3. Insert the paddle holder assembly mounting studs through the holes and securely fasten the assembly in place using the 10-32 keps nuts supplied.

4. Refer to Figure 4.3. Loosen the cable clamp at the point where the high tension cables enter the x-ray generator. Route the long straight tail of the external paddle cable (AID p/n 75032) through the cable clamp and secure the cable clamp. Connect the external paddle cable to the internal paddle cable (AID p/n 75025) on the electronics assembly mounting bracket and secure using the attached hardware.

5. Reinstall the right hand side panel.

6. Place the Mobil-AID AEC paddle in the paddle holder.

Figure 4.1

Paddle Holder Template

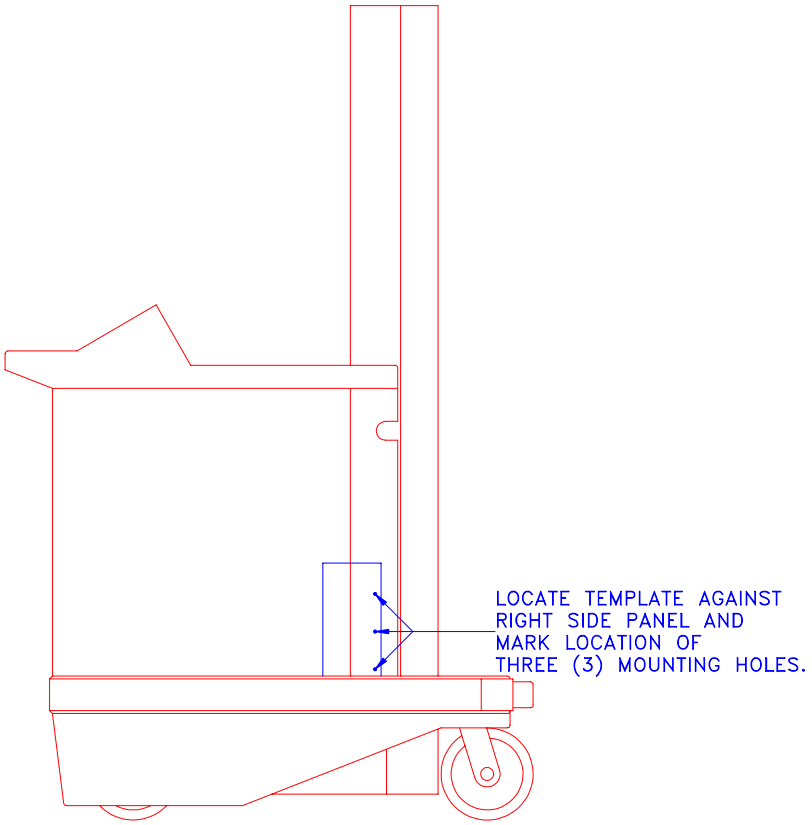

Figure 4.2

External Mounting

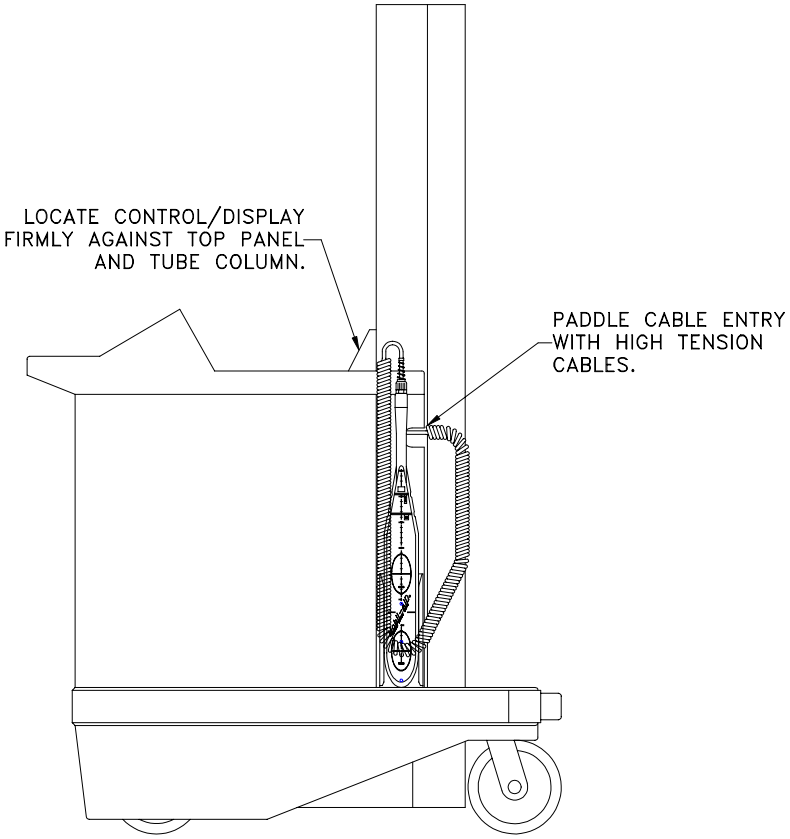

5.0 Calibration (Not Applicable)

The Mobil-AID dual field paddle is a sealed, factory calibrated unit which requires no field calibration.

6.0 Diagnostic / Troubleshooting Guide

Faultfinding - Diagnostics

The following is a list of possible problems and their likely corrections. The list is not comprehensive. Additional questions should be referred to the factory or service center. It is assumed that the Philips Practix 400 x-ray generator is in proper working order, and this should be confirmed by normal manual operation of the Philips Practix 400 after simply switching off the AEC.

Preliminary Checks:

Check to see that the Philips Practix 400 operates properly with the AEC power turned off.

Check the paddle to see that it is not physically damaged.

Check the paddle cable to see that it is not physically damaged.

Check to see that the cable connectors are securely fastened and held in place with appropriate hardware.

Check to see that the cable is routed and secured to avoid sharp edges and moving parts.

Check the paddle output at pin 8 of the paddle cable using a storage oscilloscope. Look for a positive ramping signal rising from 0.00VDC. External Trigger using the signal at pin 2 of the paddle cable (Exposure Start).

SYMPTOM: Erratic mAs and exposure times.

Check to see that the film's Optical Density (OD) remains relatively constant from shot to shot in spite of changes in mAs. If not:

- Check the regulated power supplies (+/-12V and +5V).

- Check the connections of the paddle and paddle cables.

- Check the continuity of the external paddle cable in both the extended and relaxed (coiled) conditions.

- Check the paddle output using a storage oscilloscope. Look for a positive ramping signal rising from 0.00VDC.

SYMPTOM: Exposures are too light or too dark at some kVp settings.

The kVp selected may be too low for the anatomy being radiographed. Operation of the Mobil-AID AEC below 54kVp is not recommended when using certain lead-backed cassettes.

- Check the paddle output using a storage oscilloscope. Look for a positive ramping signal rising from 0.00VDC.

- Use a higher kVp setting.

The kVp selected may be too high for the anatomy being radiographed. Operation of the Mobil-AID AEC is not recommended for exposures less than 0.4mAs.

- Use a lower kVp setting.

- Use a larger SID.

- Use a slower speed screen-film/grid combination.

7.0 REPLACEMENTS

7.1 Replacement Parts List

The following spare parts and assemblies are available for field replacement purposes. Repair of electronic circuit assemblies should be on a replacement basis and defective assemblies sent to PMS SSA for ultimate repair.

AEC MOBIL-AID Model 1340 PEI NR 9890 010 02* ** Technical

compatible to Practix 400 4512 130 827

Page	Item	Description	CCI	REC	CDSE	Technical data	OEM - ID	PMS-12 NC	1	2
	1	Padle holder assy			CE		70591_	4512 590 21801	1	
	2	Paddle Ion chamber	X	X	CE		77044_	4512 590 21831	1	
	1	Cable Paddle external		X	D	9 pin SUB-D, AEC to paddle	75032_	4512 590 21821	1	
		Installation kit HW			C	incl drill bit, template	705***_	4512 590 21***		
		AID Service Doc 705135 P400				Service manual	69265_	4512 590 21***		

7.0 REPLACEMENTS

Figure 7.1

Dual-Field Paddle and Paddle Holder Assembly

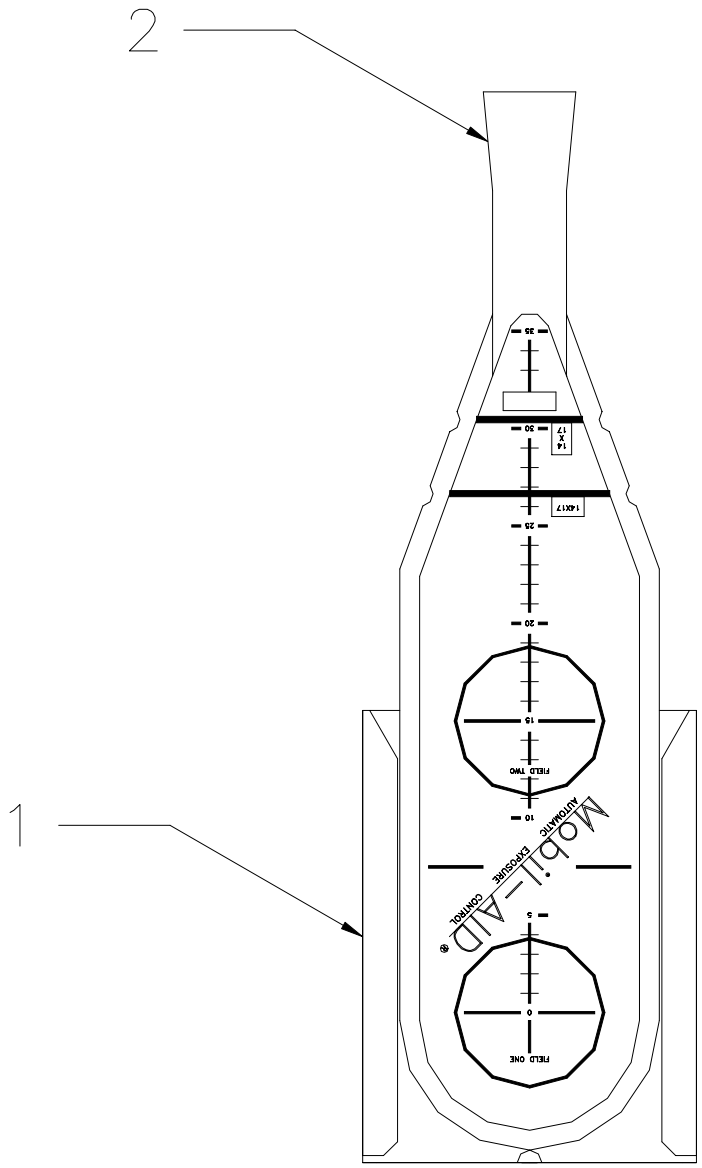

ITEM	OEM ID	DESCRIPTION
1	70591	Paddle Holder Assembly.
2	77044	Paddle Ion Chamber

Figure 7.2

75032 Paddle Cable

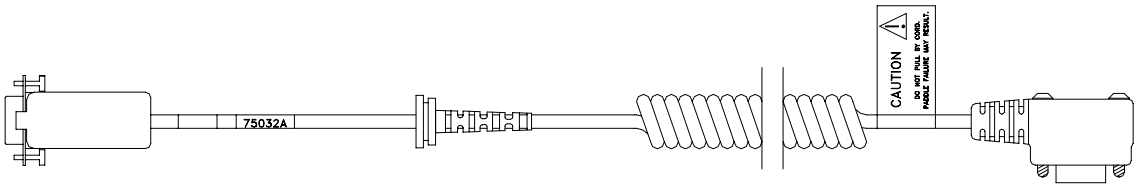

75032 pin out	Signal Name	Low-Active Signal
1	+12 VDC when AEC is On	
2	Paddle Reset	**L**
3	Field One / (L) Both Fields	**see signal name**
4	(No Connection)	
5	Paddle Interlock	**L**
6	-12 VDC when AEC is On	
7	Ground	
8	Paddle Signal	
9	+5VDC	

Note: Signals marked with the "L" symbol are low-active signals.